Work Order ID 48556

June 29, 2009 1:58:31 PM

Item ID: D3564-9 GY
Revision ID: D
Item Name: Wearshoe

Accept

Setup Start
Stop

Start Date: 15/07/2009 **Start Qty:** 12.00
Required Date: 03/08/2009 **Req'd Qty:** 12.00
Reference:

Cust Item ID:
Customer:

Run Start
Stop

Approvals: **Process Plan:** **Date:** **Tooling:** **Date:**
QC: **Date:** **SPC (Y/N):** **Date:**

Sequence ID/ Work Center ID	Operation Description	Set Up/ Run Hours	Draw Number	Draw Rev.	Plan Code	Accept Qty	Reject Qty	Reject Number	Insp. Stamp
Draw Nbr	**Revision Nbr**								
D3564	Rev D								
100	FLOW WATER JET	0.00							
Waterjet	**Memo**	0.00							
FLOW CNC Waterjet	1-Cut as per Dwg D3564 *****(D3564-1F)*****, Dwg Rev: D Prog Rev: D 2-Deburr if necessary								
110	QC2- Inspect parts off machine FAI/FAIB	0.00							
QC	**Memo**	0.00							
Quality Control									
120	QC8- Inspect parts - second check	0.00							
QC	**Memo**	0.00							
Quality Control									

HB 9-6-30

HB 9-6-30

12

Jo 06-30

12

Work Order ID 48556

June 29, 2009 1:58:31 PM

Item ID: D3564-9
Revision ID: D
Item Name: Wearshoe

Accept

Setup Start
Stop

Start Date: 15/07/2009 **Start Qty:** 12.00
Required Date: 03/08/2009 **Req'd Qty:** 12.00
Reference:

Cust Item ID:
Customer:

Run Start
Stop

Approvals: **Process Plan:** **Date:** **Tooling:** **Date:**
QC: **Date:** **SPC (Y/N):** **Date:**

Sequence ID/ Work Center ID	Operation Description	Set Up/ Run Hours	Draw Number	Draw Rev.	Plan Code	Accept Qty	Reject Qty	Reject Number	Insp. Stamp
130	NC BRAKE	0.00							
Brake NC	**Memo**	0.00							
Brake NC	Deburr if necessary. Form on Brake as per Dwg D3564 using Jigs DT ~~8129~~ 8179 and DT 8155 ~~8157~~ DT 8157. Form Joggle as per Dwg D3564 on brake using Jig DT 8157								
140	QC5- Inspect part completeness to step on W/O	0.00							
QC	**Memo**	0.00							
Quality Control	Ensure joggle as per dwg D3429								
150	Large Fab	0.00							
Large Fab	**Memo**	0.00							
Large Fab	Qty Description Batch A/R 2059B Hardcoat M10200(Weld hardcoat as per Dwg D3564								

SB · 09/06/30

— S 09/07/01 (x12)

— EL 9-7-6

(12)

Work Order ID 48556

June 29, 2009 1:58:31 PM

Item ID: D3564-9
Revision ID: D
Item Name: Wearshoe

Accept

Setup Start
Stop

Start Date: 15/07/2009 **Start Qty:** 12.00
Required Date: 03/08/2009 **Req'd Qty:** 12.00
Reference:

Cust Item ID:
Customer:

Run Start
Stop

Approvals: **Process Plan:** **Date:** **Tooling:** **Date:**
QC: **Date:** **SPC (Y/N):** **Date:**

Sequence ID/ Work Center ID	Operation Description	Set Up/ Run Hours	Draw Number	Draw Rev.	Plan Code	Accept Qty	Reject Qty	Reject Number	Insp. Stamp
160	QC10- Inspect visual per QSI004- ground welds	0.00							
QC	Memo	0.00							
Quality Control									
170	QC5- Inspect part completeness to step on W/O	0.00							
QC	Memo	0.00							
Quality Control									
180	Grey Sandtex(Ref:4.3.5.6) per QSI005 4.3	0.00							
Powdercoat	Memo	0.00							
Powder Coating	START TIME: 7:30AM OVEN TEMPERATURE: 8:00AM FINISH TIME: 320°F M1090091								

=> 5 09/07/06 (H2)

=> 5 09/07/06 (H2)

09-07-02 (K12)

Work Order ID 48556

June 29, 2009 1:58:31 PM

Item ID: D3564-9
Revision ID: D
Item Name: Wearshoe

Accept

Setup Start
Stop

Start Date: 15/07/2009 **Start Qty:** 12.00
Required Date: 03/08/2009 **Req'd Qty:** 12.00
Reference:

Cust Item ID:
Customer:

Run Start
Stop

Approvals: **Process Plan:** **Date:** **Tooling:** **Date:**
QC: **Date:** **SPC (Y/N):** **Date:**

Sequence ID/ Work Center ID	Operation Description	Set Up/ Run Hours	Draw Number	Draw Rev.	Plan Code	Accept Qty	Reject Qty	Reject Number	Insp. Stamp
190	QC3- Inspect Part Finish	0.00	BR 09-07-7		(B)				
QC	**Memo**	0.00							
Quality Control									
200	Identify as per dwg & Stock Location: FP-19	0.00	09-02-02		(K12)				
Packaging	**Memo**	0.00							
Packaging									
210	QC21- Final Inspection - Work Order Release	0.00	09/07/07						
QC	**Memo**	0.00							
Quality Control									

MF 09-08-07

Picklist Print

June 29, 2009 1:58:29 PM

Work Order ID: 48556

Parent Item: D3564-9RevD

Parent Item Name: Wearshoe

Comments:

Start Date: 15/07/2009 **Required Date:** 03/08/2009

Start Qty: 12.00 **Required Qty:** 12.00

Component Item ID/ Item Name	Replacement Item ID	Mfg/ Purch	Bin Item	Primary Location	Last Location	Route Seq ID	Unit of Measure	Qty on Hand	Remaining Qty To Pick	Qty Issued	Date Issued	Status
M304S16GA 304/316 Sheet .063		Purchased in 111924	No HB 9-6-30			100	sf	158.0110	13.8947			

Date: Friday, 12/06/2009 9:57:50 AM
User: Julie Dawson

Process Sheet

Customer : CU-DAR001 Dart Helicopters Services
Job Number : 48556
Estimate Number : 12784
P.O. Number :
This Issue : 12/06/2009 **S.O. No.** :
Prsht Rev. : NC
First Issue : / / **Type** : SMALL /MED FAB
Previous Run : 47316
Written By :
Checked & Approved By : JLD 09-06-8
Comment : Est Rev:A New Issue 07-03-08 ec
Est Rev:B As per Rev C 07-07-09 JLM
Est Rev:C As per Rev D 07-09-09 JLM Verified By:EC

Drawing Name : WEARPAD
Part Number : D35649
Drawing Number : D3564 REV D
Project Number : N/A
Drawing Revision : D
Material :
Due Date : 23/06/2009 **Qty:** 12 **Um:** Each

Additional Product

Job Number:

Seq. #:	Machine Or Operation:	Description :
1.0	M304S16GA	304/316 Sheet .063

Comment: Qty.: 1.1550 sf(s)/Unit Total : 13.8600 sf(s)
M304S16GA Stainless steel sheet 0.063" thick
Batch: 111924 HB 9-6-30

2.0	WATER JET	FLOW WATER JET

Comment: FLOW WATER JET
1-Cut as per Dwg D3564 *****(D3564-1F)*****
Dwg Rev: D HB 9-6-30
Prog Rev: D
2-Deburr if necessary HB 9-6-30

3.0	QC2	INSPECT PARTS AS THEY COME OFF MACHINE

HB 9-6-30

Comment: INSPECT PARTS AS THEY COME OFF MACHINE

4.0	QC8	SECOND CHECK

Comment: SECOND CHECK

5.0	BRAKE NC	NC BRAKE

Comment: NC BRAKE
Deburr if necessary
Form on Brake as per Dwg D3564 using Jigs DT 8129 and DT 8155

Dart Aerospace Ltd

W/O:		WORK ORDER CHANGES					
DATE	STEP	PROCEDURE CHANGE	By	Date	Qty	Approval Chief Eng / Prod Mgr	Approval QC Inspector

Part No: _____ **PAR #:** _____ **Fault Category:** _____ **NCR:** Yes No **DQA:** _____ **Date:** _____

Resolution: _____ **Disposition:** _____ **QA: N/C Closed:** _____ **Date:** _____

NCR:		WORK ORDER NON-CONFORMANCE (NCR)						
DATE	STEP	Description of NC Section A	Corrective Action Section B			Verification Section C	Approval Chief Eng	Approval QC Inspector
			Initial Chief Eng	Action Description Chief Eng	Sign & Date			

NOTE: Date & initial all entries

H:\fFORMS\Quality Assurance\approved QA\NCRWO RevE

Date: Friday, 12/06/2009 9:57:50 AM
User: Julie Dawson

Process Sheet

Customer: CU-DAR001 Dart Helicopters Services **Drawing Name:** WEARPAD

Job Number: 48556 **Part Number:** D35649

Job Number:

Seq. #:	Machine Or Operation:	Description :
	Form Joggle as per Dwg D3564 on brake using Jig DT 8157	
6.0	QC5	INSPECT WORK TO CURRENT STEP
	Comment: INSPECT WORK TO CURRENT STEP Ensure joggle as per dwg D3429	
7.0	LARGE FAB 1	LARGE FABRICATION RESOURCE 1
	Comment: LARGE FABRICATION RESOURCE 1 Qty Description Batch A/R 2059B Hardcoat _____ Weld hardcoat as per Dwg D3564	
8.0	QC10	VISUAL INSPECTION OF GROUND WELDS
	Comment: VISUAL INSPECTION OF GROUND WELDS	
9.0	QC5	INSPECT WORK TO CURRENT STEP
	Comment: INSPECT WORK TO CURRENT STEP	
10.0	POWDER COATING	POWDER COATING
	M109091	
	Comment: POWDER COATING Powder Coat Grey Sandtex (Ref: 4.3.5.6) as per QSI 005 4.3 START TIME: 7:30Am OVEN TEMPERATURE: 320°F FINISH TIME: 8:00Am JJ 09.07.07	
11.0	QC3	INSPECT POWDER COAT/CHEMICAL CONVERSION
	Comment: INSPECT POWDER COAT/CHEMICAL CONVERSION BK 09-07-7	
12.0	PACKAGING 1	PACKAGING RESOURCE #1
	Comment: PACKAGING RESOURCE #1 Identify and Stock Location: FP-19 JJ 09-07-07	

Form: rprocess

Dart Aerospace Ltd

W/O:		WORK ORDER CHANGES					
DATE	STEP	PROCEDURE CHANGE	By	Date	Qty	Approval Chief Eng / Prod Mgr	Approval QC Inspector

Part No: _____ **PAR #:** _____ **Fault Category:** _____ **NCR:** Yes No **DQA:** _____ **Date:** _____

Resolution: _____ **Disposition:** _____ **QA: N/C Closed:** _____ **Date:** _____

NCR:		WORK ORDER NON-CONFORMANCE (NCR)						
DATE	STEP	Description of NC Section A	Corrective Action Section B			Verification Section C	Approval Chief Eng	Approval QC Inspector
			Initial Chief Eng	Action Description Chief Eng	Sign & Date			

NOTE: Date & initial all entries

H:\fFORMS\Quality Assurance\approved QA\NCRWO RevE

Date: Friday, 12/06/2009 9:57:50 AM
User: Julie Dawson

Process Sheet

Customer: CU-DAR001 Dart Helicopters Services **Drawing Name:** WEARPAD

Job Number: 48556 **Part Number:** D35649

Job Number:

Seq. #:	Machine Or Operation:	Description :
13.0	QC21	FINAL INSPECTION/W/O RELEASE

Comment: FINAL INSPECTION/W/O RELEASE

Job Completion

Form: rprocess

Dart Aerospace Ltd

W/O:		WORK ORDER CHANGES					
DATE	STEP	PROCEDURE CHANGE	By	Date	Qty	Approval Chief Eng / Prod Mgr	Approval QC Inspector

Part No: _____ **PAR #:** _____ **Fault Category:** _____ **NCR:** Yes No **DQA:** _____ **Date:** _____

Resolution: _____ **Disposition:** _____ **QA: N/C Closed:** _____ **Date:** _____

NCR:		WORK ORDER NON-CONFORMANCE (NCR)						
DATE	STEP	Description of NC Section A	Corrective Action Section B			Verification Section C	Approval Chief Eng	Approval QC Inspector
			Initial Chief Eng	Action Description Chief Eng	Sign & Date			

NOTE: Date & initial all entries

H:\fFORMS\Quality Assurance\approved QA\NCRWO RevE

DART AEROSPACE LTD	Work Order:	48556
Description: Wearshoe	Part Number:	D3564-9
Inspection Dwg: D3564 **Rev:** D		Page 1 of 1

FIRST ARTICLE INSPECTION CHECKLIST

[X] First Article [ ] Prototype

Drawing Dimension	Tolerance	Actual Dimension	Accept	Reject	Method of Inspection	Comments
3.227	+/-0.010	3.226	*			
2.432	+/-0.010	2.434	*			
2.50	+/-0.030	2.50	*			
6.000	+/-0.010	6.000	*			
12.104	+/-0.010	12.104	*			
18.000	+/-0.010	18.000	*			
18.000	+/-0.010	18.00	*			
18.00	+/-0.030	18.00	*			
9.00	+/-0.030	9.00	*			
11.50	+/-0.030	11.50	*			
0.300 x 0.300	+/-0.010	.301 x .303	*			
Ø0.188	+0.005/-0.001	.190	*			
R0.375	+/-0.010	.375	*			
0.063	+/-0.010	.059	*			

Measured by:	LB	Audited by:		Prototype Approval:	N/A
Date:	9-6-30	Date:	150630	Date:	N/A

Rev	Date	Change	Revised by	Approved
A	08.01.16	New Issue	KJ/EC/DD	

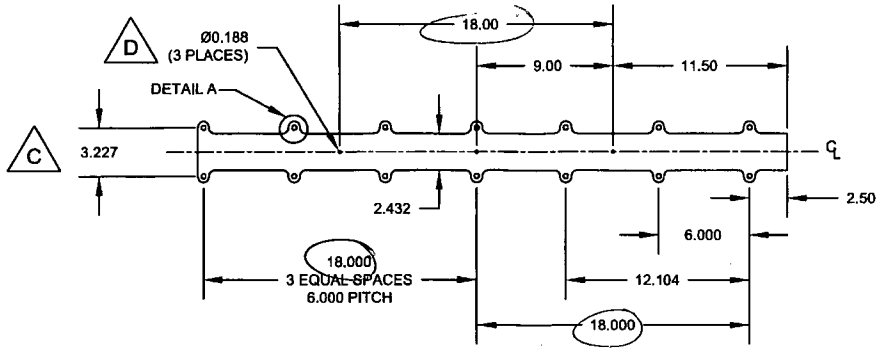

D3564-1F FLAT PATTERN

RELEASED
07.09.04

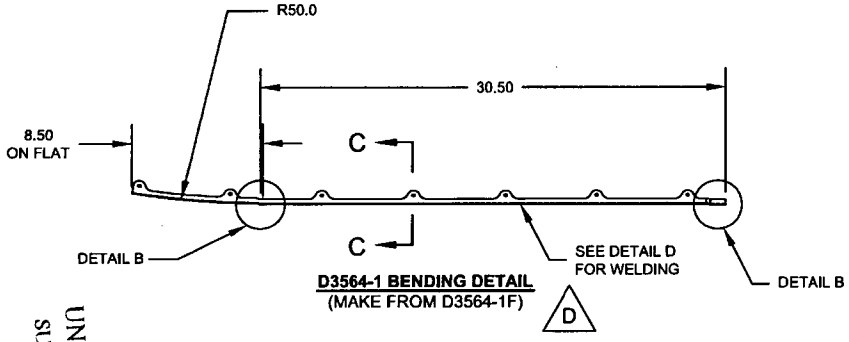

D3564-1 BENDING DETAIL
(MAKE FROM D3564-1F)

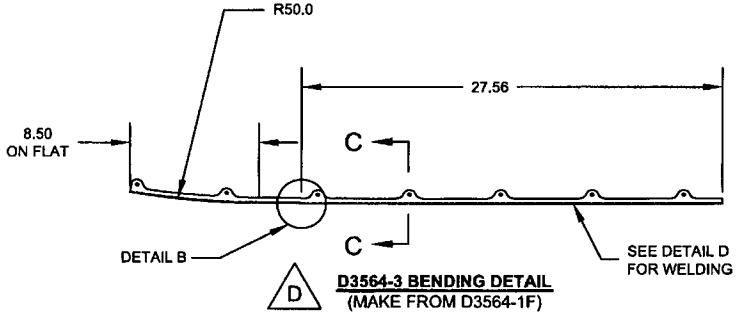

D3564-3 BENDING DETAIL
(MAKE FROM D3564-1F)

SHOP COPY
RETURN TO
ENGINEERING
UNCONTROLLED COPY
SUBJECT TO AMENDMENT
WITHOUT NOTICE
WORK ORDER
NO. 78556

D3564-1/-3/-5/-7/-9/-11/-13/-15 WEARPLATE NOTES:

1) MATERIAL: AISI 304/316 SS SHEET PER AMS 5513 OR AMS 5524, 16 GAUGE (0.063 THICK)
(REF DART MATERIAL SPEC M304S16GA)
2) FINISH: POWDER COAT GREY SANDTEX (REF 4.3.5.6) PER DART QSI 005 4.3
3) TOLERANCES: PER DART QSI 018 UNLESS OTHERWISE NOTED
4) UNITS: INCHES UNLESS OTHERWISE NOTED
5) BREAK SHARP EDGES: 0.005 TO 0.015 MAX
6) IDENTIFICATION: NONE
7) WEIGHT: SEE TABLE IN ZONE A3
8) WELD PER DART QSI 004
9) SEE PG 3 FOR SECTIONS AND DETAILS
10) PARTS ARE SYMMETRIC ABOUT ℄

WEIGHTS:

D3564-1	1.85 lbs
D3564-3	1.85 lbs
D3564-5	1.93 lbs
D3564-7	1.26 lbs
D3564-9	1.85 lbs
D3564-11	1.85 lbs
D3564-13	0.38 lbs
D3564-15	0.80 lbs

REV.	DESCRIPTION	BY	DATE
D	UPDATE DRAWING TEMPLATE; CHANGE ALL (TYP X PLS) TO (X PLACES); PG1 A8: UPDATE NOTES; PG1 A8, PG3 B5,C5: ADD D3564-15; PG1 B6,B3: D3564-1/-3 WAS ONE FIGURE; PG2 A7,A3: D3564-9/-11 WAS ONE FIGURE; PG2 A7,A3: D3564-9/-11 WAS ON PG1; PG3 B8,C8: D3564-13 WAS ON PG2; PG3 D2: WELDING DETAIL WAS ON PG1 PG3 A5,7,B2: RELOCATE DETAILS AND SECTION; PG3 A5,7,B2: INCREASE DETAIL AND SECTION SIZE	CB	07.08.21
C	MOVE TAB OUTBOARD, DETAIL A	PH	07.04.17
B	ADD AMS 5513 AND AMS 5524	PH	07.03.20
A	NEW ISSUE	PH	06.12.18

DESIGN	PH	**DART AEROSPACE LTD** HAWKESBURY, ONTARIO, CANADA
DRAWN	CB	
CHECKED	PH	DRAWING NO. REV. D
MFG. APPR.		D3564 SHEET 1 OF 3
APPROVED		TITLE SCALE
DE APPR.		WEARSHOE 1:8
DATE	07.08.21	

COPYRIGHT © 2006 BY DART AEROSPACE LTD
THIS DOCUMENT IS PRIVATE AND CONFIDENTIAL AND IS SUPPLIED ON THE EXPRESS CONDITION THAT IT IS NOT TO BE USED FOR ANY PURPOSE OR COPIED OR COMMUNICATED TO ANY OTHER PERSON WITHOUT WRITTEN PERMISSION FROM DART AEROSPACE LTD.

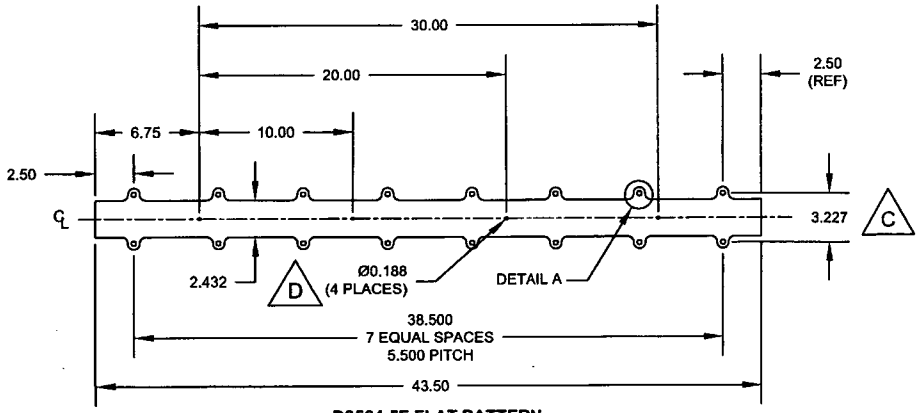

D3564-5F FLAT PATTERN

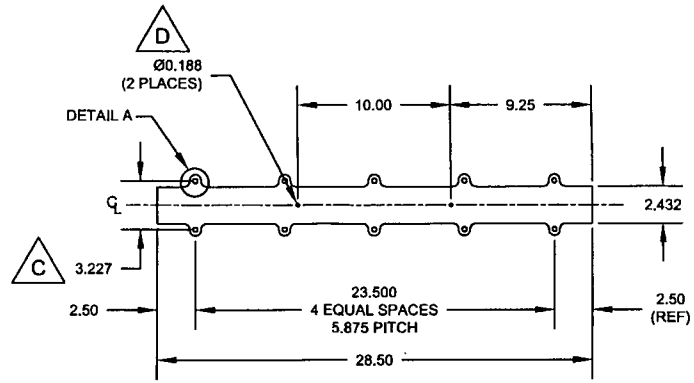

D3564-7F FLAT PATTERN

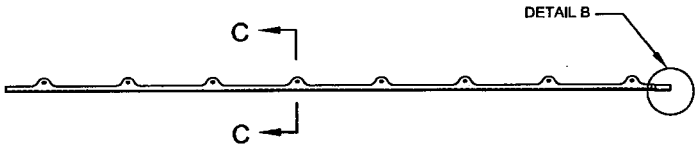

D3564-5 BENDING DETAIL
(MAKE D3564-5 FROM D3564-5F)

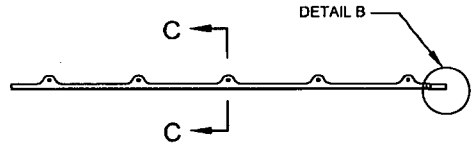

D3564-7 BENDING DETAIL
(MAKE D3564-7 FROM D3564-7F)

RELEASED
07.09.04

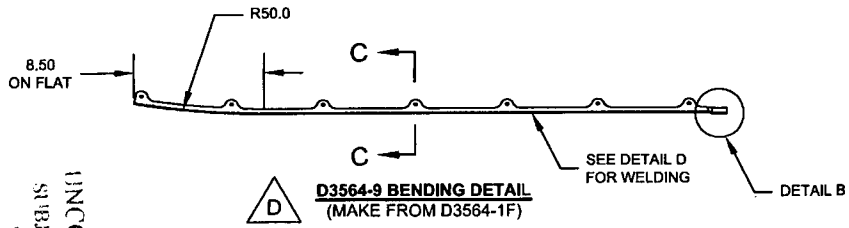

D3564-9 BENDING DETAIL
(MAKE FROM D3564-1F)

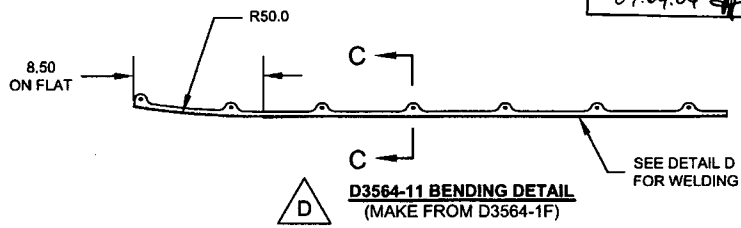

D3564-11 BENDING DETAIL
(MAKE FROM D3564-1F)

SHOP COPY
RETURN TO
ENGINEERING
UNCONTROLLED COPY
SUBJECT TO AMENDMENT
WITHOUT NOTICE
WORK ORDER
NO. 178550

DESIGN	PH	**DART AEROSPACE LTD** HAWKESBURY, ONTARIO, CANADA
DRAWN	CB	
CHECKED	PH	DRAWING NO. D3564 — REV. D — SHEET 2 OF 3
MFG. APPR.		
APPROVED		TITLE: WEARSHOE — SCALE 1:8
DE APPR.	PH	
DATE	07.08.21	

COPYRIGHT © 2006 BY DART AEROSPACE LTD
THIS DOCUMENT IS PRIVATE AND CONFIDENTIAL AND IS SUPPLIED ON THE EXPRESS CONDITION THAT IT IS NOT TO BE USED FOR ANY PURPOSE OR COPIED OR COMMUNICATED TO ANY OTHER PERSON WITHOUT WRITTEN PERMISSION FROM DART AEROSPACE LTD.

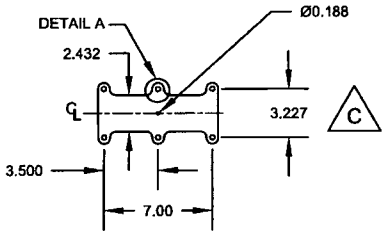

D3564-13F FLAT PATTERN

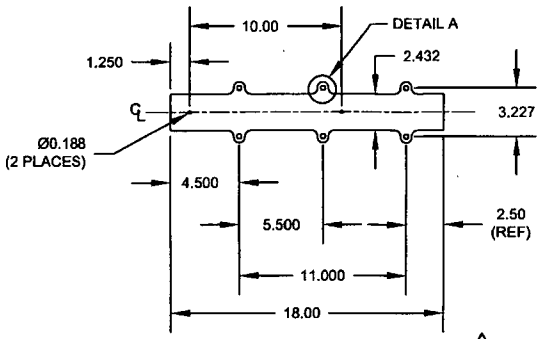

D3564-15F FLAT PATTERN D

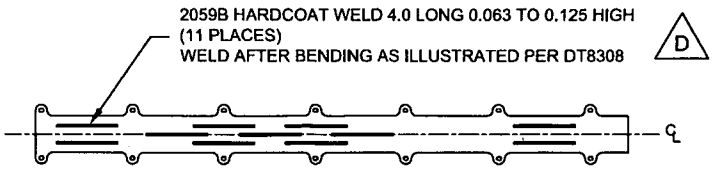

DETAIL D
(D3564-1/-3/-9/-11 WELDING DETAIL)

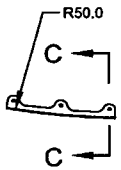

D3564-13 BENDING DETAIL
(MAKE D3564-13 FROM D3564-13F)

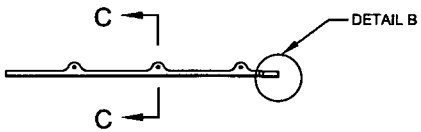

D3564-15 BENDING DETAIL
(MAKE D3564-15 FROM D3564-15F) D

RELEASED
07.09.04

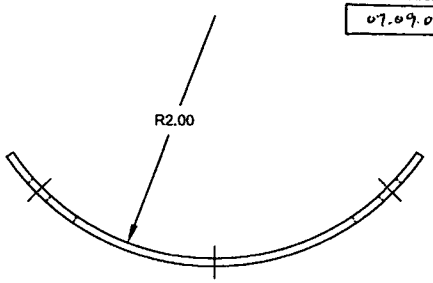

SECTION C-C
SCALE 1:1

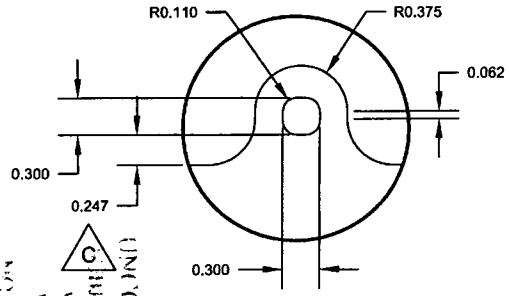

DETAIL A
SCALE 1:1 C

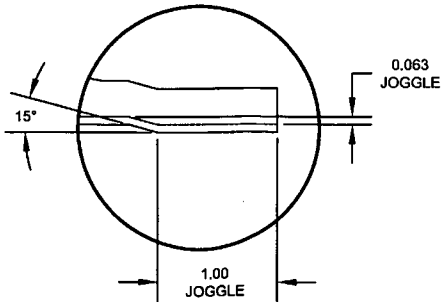

DETAIL B
SCALE 1:1

DESIGN	PH	**DART AEROSPACE LTD** HAWKESBURY, ONTARIO, CANADA
DRAWN	CB	
CHECKED	PH	DRAWING NO. D3564 — REV. D — SHEET 3 OF 3
MFG. APPR.		
APPROVED		TITLE: WEARSHOE — SCALE 1:8
DE APPR.		
DATE	07.08.21	

COPYRIGHT © 2006 BY DART AEROSPACE LTD
THIS DOCUMENT IS PRIVATE AND CONFIDENTIAL AND IS SUPPLIED ON THE EXPRESS CONDITION THAT IT IS NOT TO BE USED FOR ANY PURPOSE OR COPIED OR COMMUNICATED TO ANY OTHER PERSON WITHOUT WRITTEN PERMISSION FROM DART AEROSPACE LTD.

UNCONTROLLED COPY
SUBJECT TO AMENDMENT
WITHOUT NOTICE
SHOP COPY
ENGINEERING
RETURN TO
WORK ORDER
NO. 78556